technical drawings

astec round lock

01.03.2008

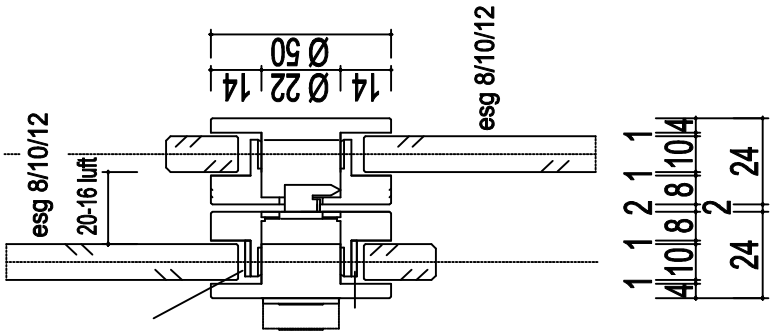

glass drilling Ø35mm

art. no. 9.90.02

round lock

pressure-rotary cylinder

please indicate thickness of door leaf

astec gmbh. design beschlaege. sigmaringer str. 84. d-72458 albstadt. fon (+49)7431-1340-0. fax (+49)7431-1340-19
gf dieter hofmann. HRB 400802 stuttgart. www.astec-design.de. info@astec-design.de